VERSA STEEL
SPECIFICATION

FLOOR, SIDEWALK & STREET
H20 TRAFFIC RATING

H20 HATCH ASSEMBLY, DUAL LEAF-60X72

Assembly No.:VSH-H20-A-60-72-D-GS

ASSEMBLY NO./PART NUMBER KEY:

VSH= VERSA STEEL INC. HATCH
H20 = FLUSH H20 TRAFFIC RATED, CAST IN DRAINABLE FRAME
A= ALUMINUM CONSTRUCTION
36-36= SIZE INTERIOR OPENING
D = DUAL LEAF
GS= GAS SPRING ASSIST

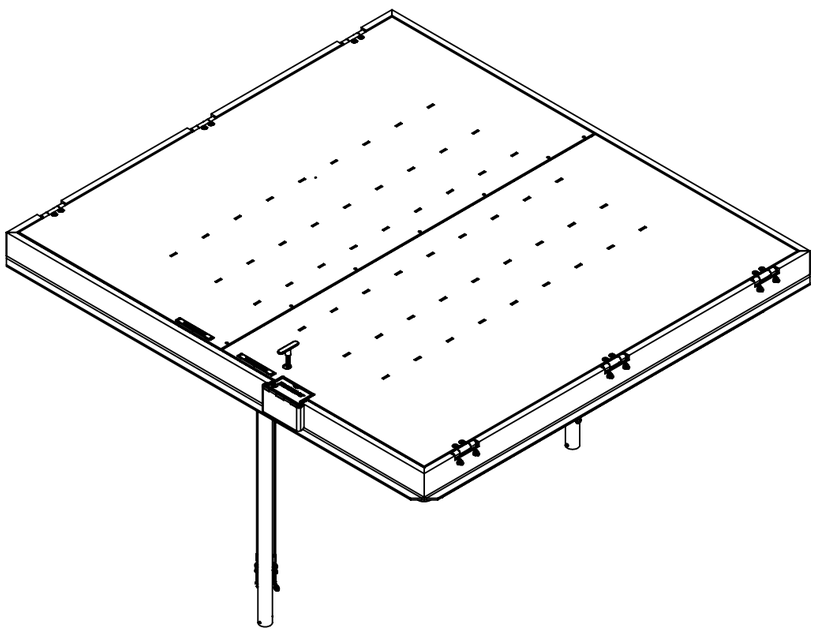

GENERAL SPECIFICATIONS:

1. UNIT IS WEATHER PROOF WITH CONTINOUS EPDM SEAL ON LID TO FRAME.
2. LID TOP IS FLUSH TO FRAME. FRAME IS CONTINOUS EXTRUDED CHANNEL.
3. LID IS HINGED ON SIDE WITH TAMPER PROOF SCREWS AND PROVISION FOR A PADLOCK WITH TAMPER PROOF COVER.
4. HATCH IS DESIGNED FOR H20 TRAFFIC LOAD, LOW DENSITY TRAFFIC.
5. DESIGNED TO BE CAST IN CONCRETE CURBING AT TOP OF VAULT.
6. LID IS A 1/4" 6061 ALUMINUM TREAD PLATE. OPTIONAL NON-SLIP COATING.
7. ALL FASTENERS AND HARDWARE ARE 316 STAINLESS STEEL.
8. ONE COAT OF BLACK BITUMINOUS PAINT ON THE INSIDE OF FRAME WHERE IT CONTACTS CURBING CONCRETE.
9. DRAINABLE FRAME, DRAIN FITTING SUPPLIED IN ONE CORNER, PLUMBED BY OTHERS.
10. LIDS ARE HELD OPEN IN A 90 DEGREE POSITION WITH A LOCK OPEN ARMS. ARMS ARE MANUALLY RELEASED TO CLOSE HATCH. A CENTER ASTRAGAL DRAINS TO FRAME FOR ANY LEAKAGE IN THE JOINT OF THE TWO LIDS.
11. GAS SPRING ASSIST ON DOOR MANUFACTURED FROM 316 STAINLESS AND FILLED WITH FOOD GRADE OIL.
12. STAINLESS FLUSH LIFT HANDLES ARE SUPPLIED AND ARE FLUSH WHEN NOT IN USE.
13. SLAM LOCK LATCH IS PROVIDED WITH A TAMPER PROOF PLUG INSTALLED IN LID, COMES WITH A TEE HANDLE TO REMOVE PLUG AND ACTUATE SLAM LOCK.

THIS DOCUMENT CONTAINS PROPRIETARY, TRADE SECRET INFORMATION THAT IS THE PROPERTY OF VERSA STEEL, INC. THE INFORMATION CONTAINED IN THIS DOCUMENT, INCLUDING THE PRINCIPLE OF DESIGN, MAY NOT BE USED OR COPIED, IN WHOLE OR IN PART, WITHOUT THE EXPRESS PRIOR WRITTEN CONSENT OF VERSA STEEL, INC.

REV	ISSUED FOR	DATE	BY
A			
B			
C			
D			
E			
F			
G			

VERSA STEEL, INC.
1618 NE FIRST AVENUE
PORTLAND, OREGON 97232
(503)287-9822
FAX (503)-287-7483

DRAWN BY: E.BAILIFF
DATE: 2010-11-24
CHECKED BY:
APPROVED BY:

MATERIAL: Aluminum
FINISH: Bare
SHEET TITLE: H20 HATCH ASSEMBLY, DUAL LEAF-60X72
PART NUMBER: VSH-H20-A-60-72-D-GS

PART NUMBER: VSH-H20-A-60-72-D-GS
SUPPLIER:
SCALE: 1:20
DRAWING NO.: VSH-H20-A-60-72-D-GS-SPEC
REVISION NO.: A
SHEET NO.: 1 OF 2

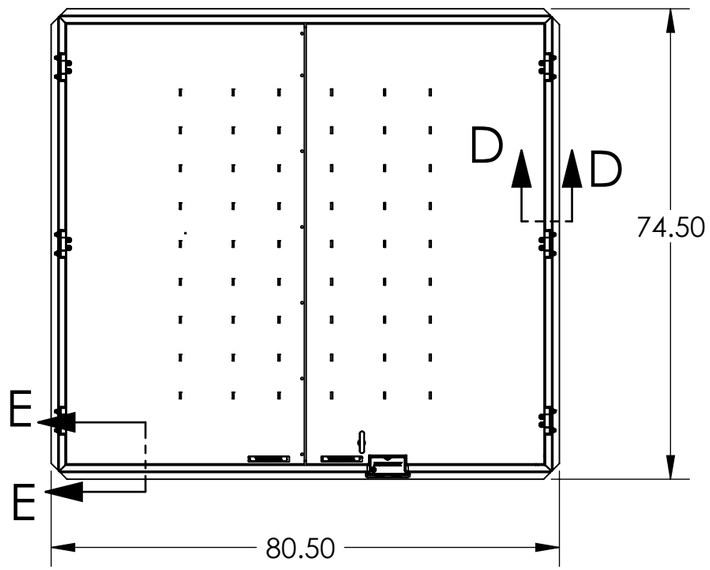

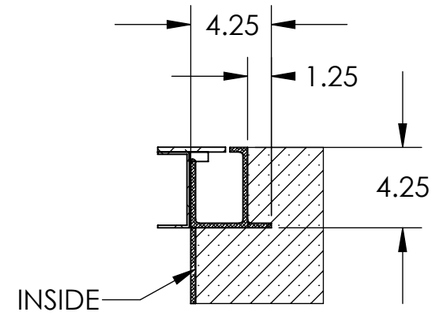

SECTION D-D
SCALE 1 : 8

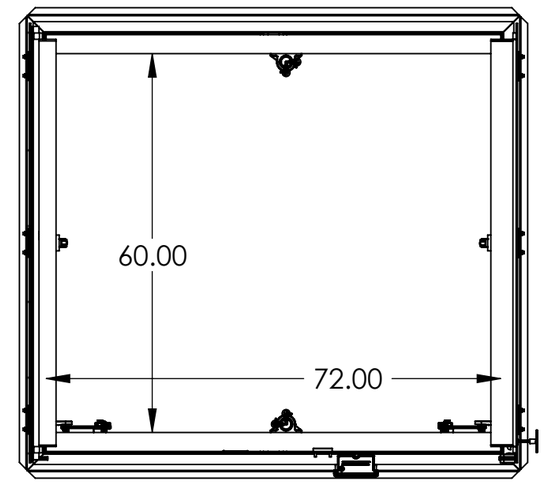

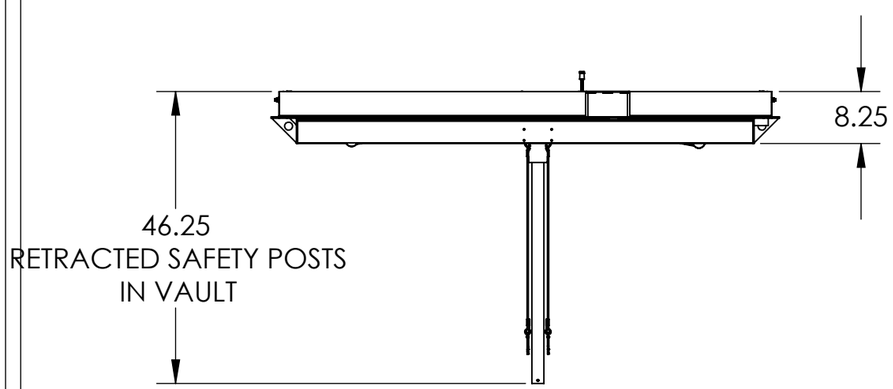

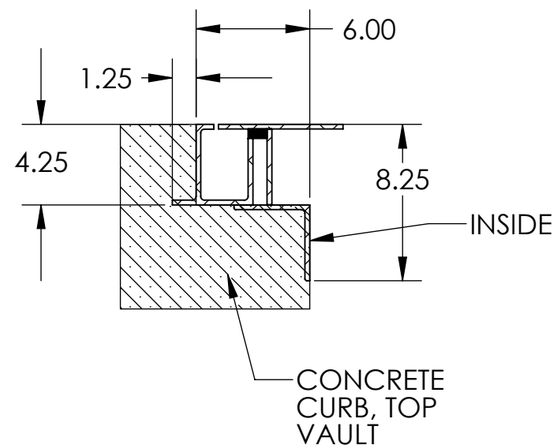

SECTION E-E
SCALE 1 : 8

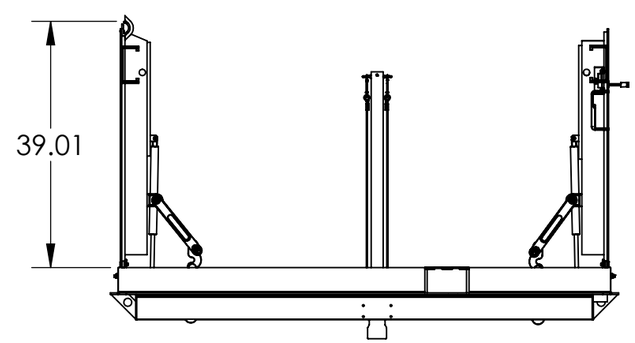

NOTES:
PN: VSH-H20-A-60-72-D-GS
DESC: H20 HATCH ASSEMBLY, DUAL LEAF-60X72
MATRL: Aluminum
EST. WT: 564.99
FINISH: Bare
NOTE:
CAD FILE: VSH-H20-A-60-72-D-GS-SPEC

THIS DOCUMENT CONTAINS PROPRIETARY, TRADE SECRET INFORMATION THAT IS THE PROPERTY OF VERSA STEEL, INC. THE INFORMATION CONTAINED IN THIS DOCUMENT, INCLUDING THE PRINCIPLE OF DESIGN, MAY NOT BE USED OR COPIED, IN WHOLE OR IN PART, WITHOUT THE EXPRESS PRIOR WRITTEN CONSENT OF VERSA STEEL, INC.

REV	ISSUED FOR	DATE	BY
G			
F			
E			
D			
C			
B			
A			

VERSA STEEL, INC.
1618 NE FIRST AVENUE
PORTLAND, OREGON 97232
(503)287-9822
FAX (503)-287-7483

DRAWN BY: E.BAILIFF
DATE: 2010-11-24
CHECKED BY:
APPROVED BY:

MATERIAL: Aluminum
FINISH: Bare
SHEET TITLE: H20 HATCH ASSEMBLY, DUAL LEAF-60X72
PART NUMBER: VSH-H20-A-60-72-D-GS

PART NUMBER: VSH-H20-A-60-72-D-GS
SUPPLIER:
SCALE: 1:24
DRAWING NO.: VSH-H20-A-60-72-D-GS-SPEC
REVISION NO.: A
SHEET NO.: 2 OF 2